Clyde Data Sheet

1600 x 295mm White Designer Radiator

Height: 1600mm
Width: 295mm
No. Of Tubes: 4
Water Content: 295mm
Colour: White
Watts: 1277
BTU: @ Delta T50: 4357mm **@ Delta T60:** 5577mm

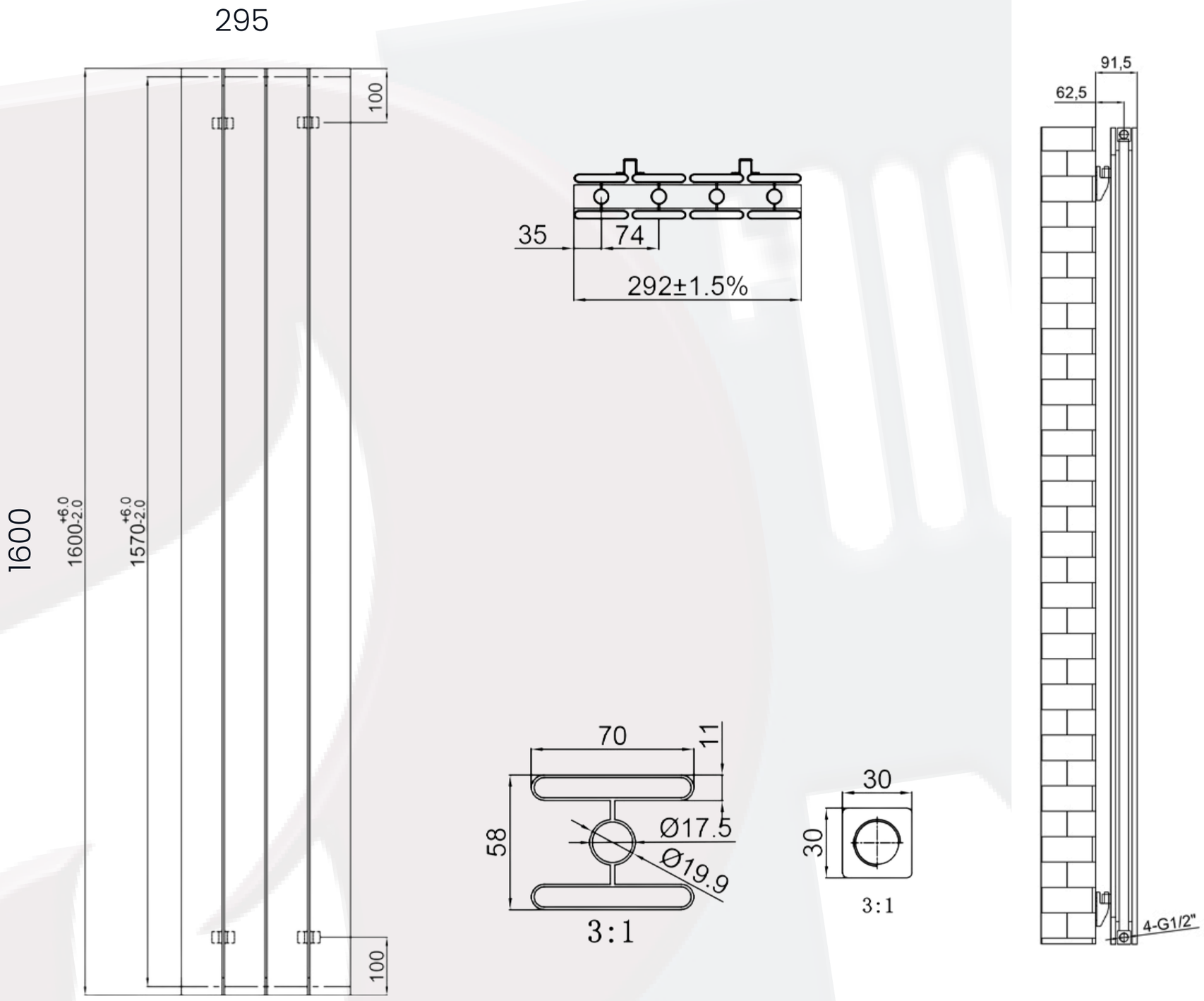

All Direct Radiators are BOE and pipe centres are the radiator width plus 74mm.

Please note due to manufacturing tolerances pipe centres may vary by +/- 10mm, we recommend that pipe work is not altered until your radiator is on site.

All Clyde Radiators: **Test Pressure:** 13 bar **Max Operating Pressure:** 10 Bar

www.directradiators.co.uk